B1638M	Operating Frequency 工作频率：220HZ ~360HZ	Weight 重量: 27g (Approx.)

Sonic Motor-Typical Application 声波振动电机-典型应用

Electric Toothbrushes, Health Care Products, Cleaning Equipment, Etc.

电动牙刷、保健器材、清洁用具等。

Model 型号	Voltage(V) 电压		No Load 空载		Rated Load 额定负载		Stall 堵转	
	Operating Range	Rated	Current (A)	Vibration frequency (times/minute)	Current (A)	Vibration frequency (times/minute)	Torque (mNm)	Current (A)
B1638M-S01	3.7~4.2	3.7	0.09	40800	0.35	36000	15	1.0

Characteristic: Operating Frequency220HZ ~360HZ，Low Noise，NO EMI，Hight Holding Torque，Accurate positioning.

特征：工作频率范围 220HZ ~360HZ，噪音低，无电磁干扰，保持力矩高，精确定位。

Notice: Data in this typical specification sheet are for other certain customer. Voltage, rated torque, speed, current, power and shaft extension feature & dimension can be changed to meet customer specific requirement.

注意：上述规格仅针对特定客户，电压、扭矩、转速、电流、功率、输出轴的特征和尺寸等都可以按照客户的特殊要求进行调整。

Outline Drawing 外形图:

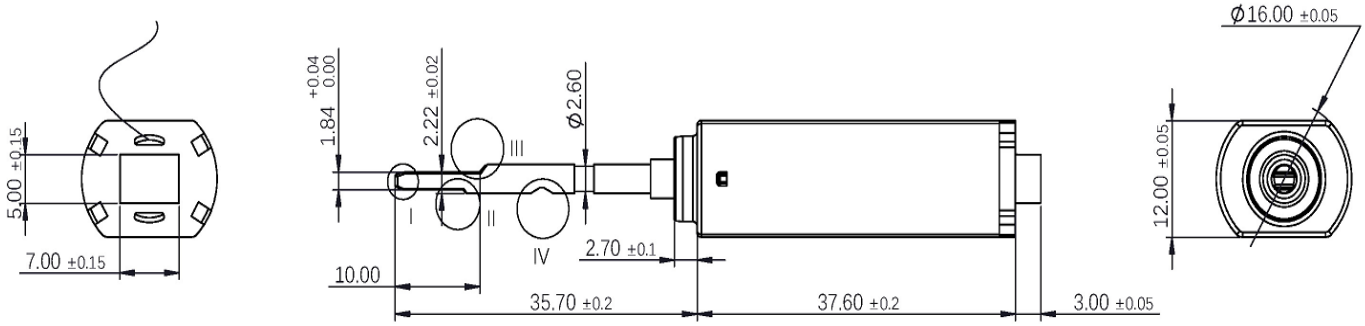

Usable machine screw length 1.5mm max. from motor mounting surface

Unit: Millimeter

Performance Curve 性能曲线:

B1638M-S01 3.7 V

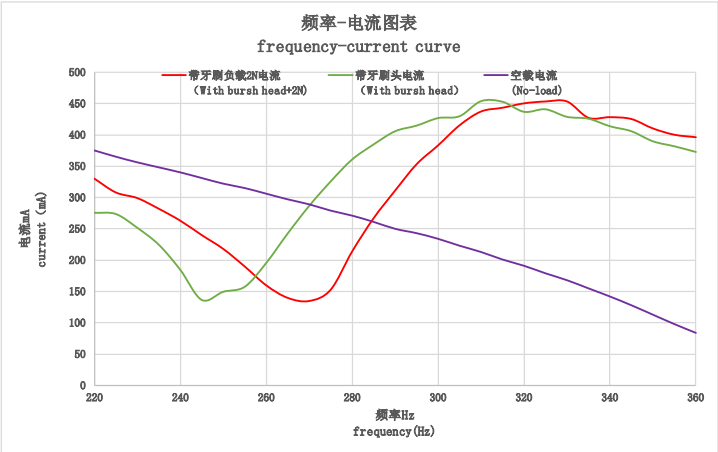

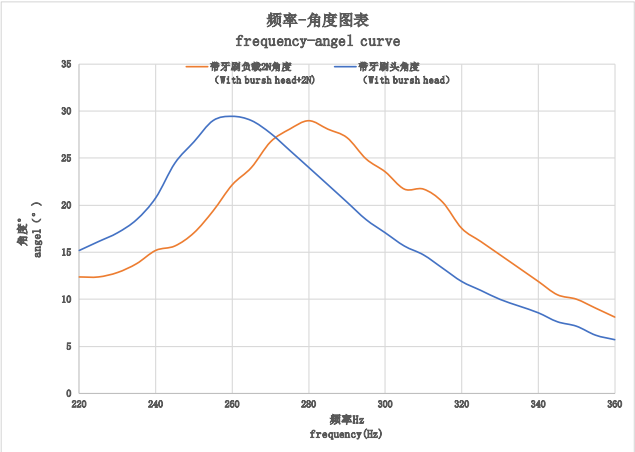

地址：广东省深圳市宝安区福海新田大道福宁高新产业园 A 栋、F 栋
Address: Building A & F, Funing Hi-Tech Park, Xintian Road, Fuhai, BaoAn District, Shenzhen, Guangdong Province, China
电话 Tel：86-755-29169191,29169292 传真 Fax：86-755-29169007 邮箱 Email:sales@hengdrive.com 网址 Http://www.hengdrive.com